Products | Services | Contact | Home

SCHWEITZER ENGINEERING LABORATORIES, INC.

Synchronized Data Collection and Local Storage

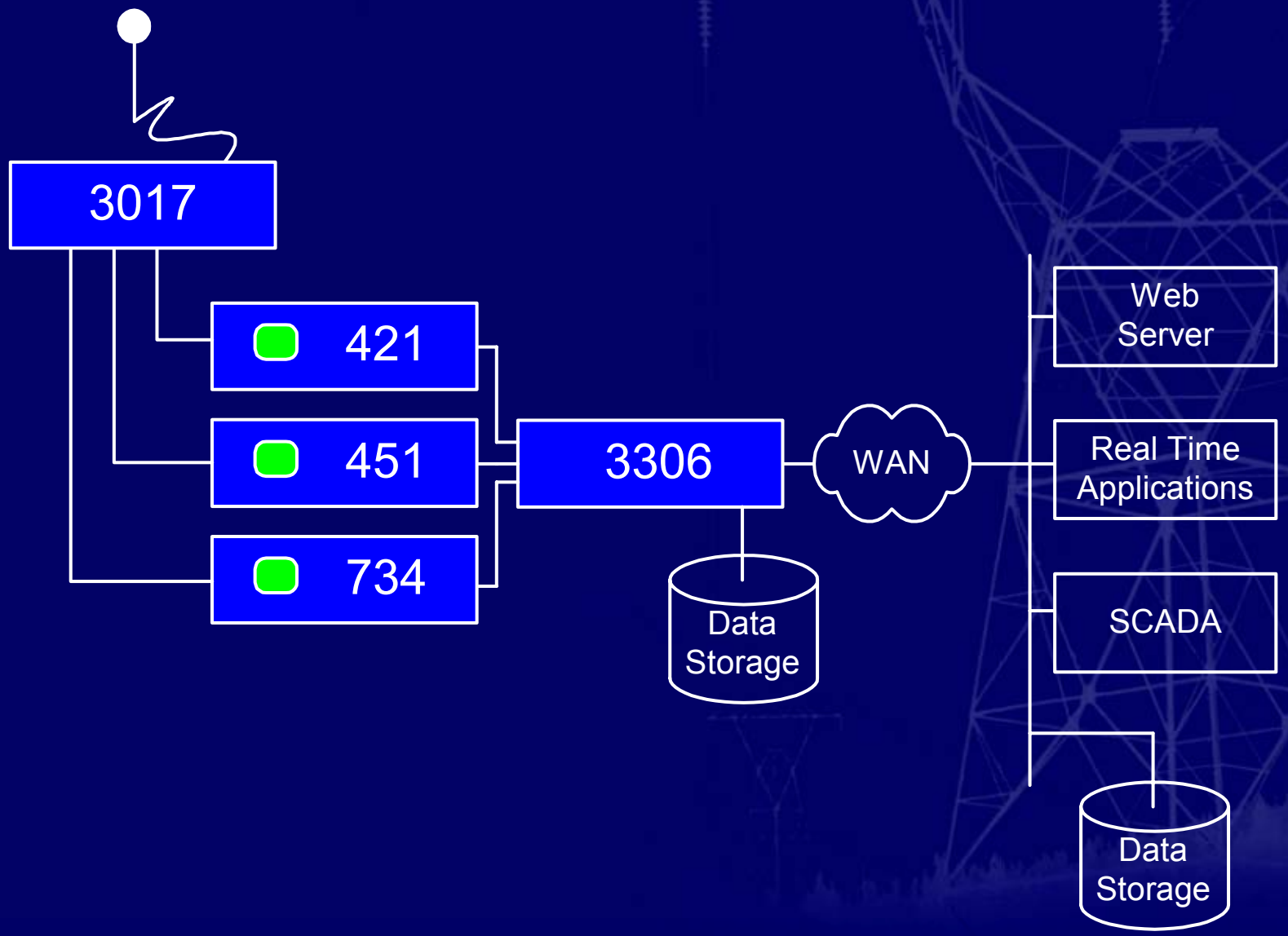

Synchronized Measurement Network

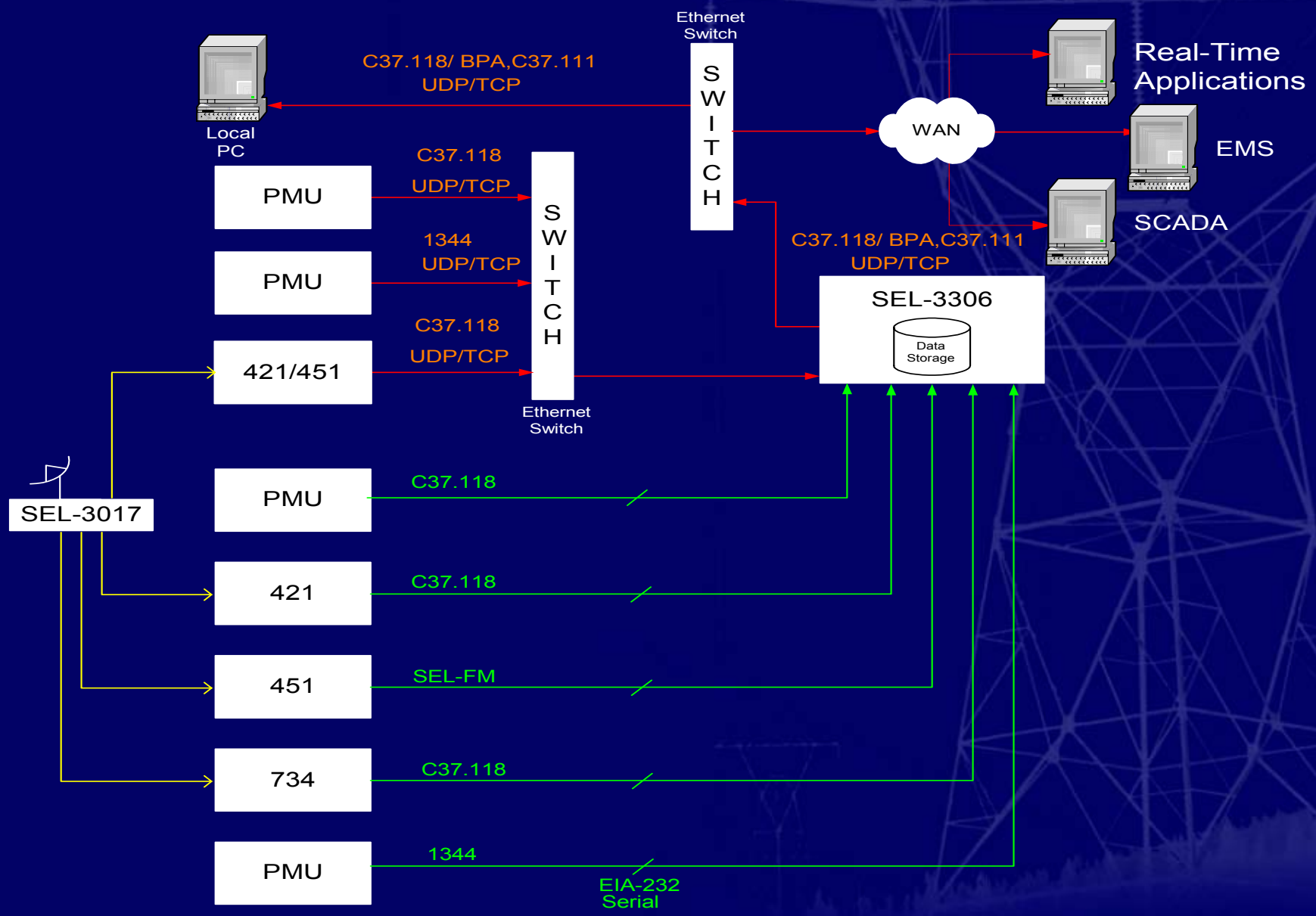

SEL-3017
Satellite Synchronized Clock

SEL–421 Enhancements

- November
  - Addition of IEEE PC37.118 Protocol
  - Up to 60 Messages/second
  - Suitable for Two-Line Synch. Phasor Meas.
  - Time Error Measurement
  - Simplification of Time-synchronization Circuitry
    - Removal of 1k PPS input
  - Add Synchrophasor functionality to the SEL-421-1

SEL–3306
Synchrophasor Processor

SEL-3300 Series Computing Platform
Outperforms Standard PCs

SEL-3306 Key Features

- Supports Multiple Input Formats
  - IEEE 1344
  - IEEE PC37.118
  - SEL Fast Message
- Supports Multiple Output Formats
  - PC37.118, UDP and TCP/IP
  - BPA UDP
- OPC XML Server

SEL-3306 Key Features

- Onboard Archiving
  - Triggered event storage
    - C37.111 COMTRADE file format
  - Continuous storage
    - up to 32 days on-board
- Up To 40 PMU Connections
  - 7 RS-232 serial ports
  - 33 Ethernet sessions
  - 64 bytes/packet, 60 messages/second

Synchronized Phasor Measurements

Why 60 Messages per Second?

Correlate the Input Signal With a Time-Synchronized Signal to Extract Phase Angle Information

$$\vec{V} = \underbrace{V\cos(\omega t + \phi)}_{\text{Input Signal}} e^{-j\omega_0 t}$$

$$\vec{V} = \frac{V}{2}\left[e^{j(\omega t+\phi)} + e^{-j(\omega t+\phi)}\right]e^{-j\omega_0 t}$$

$$\vec{V} = \frac{V}{2}\left\{e^{j[(\omega-\omega_0)t+\phi]} + e^{-j[(\omega+\omega_0)t+\phi]}\right\}$$

Principle of Absolute Phasor Measurement

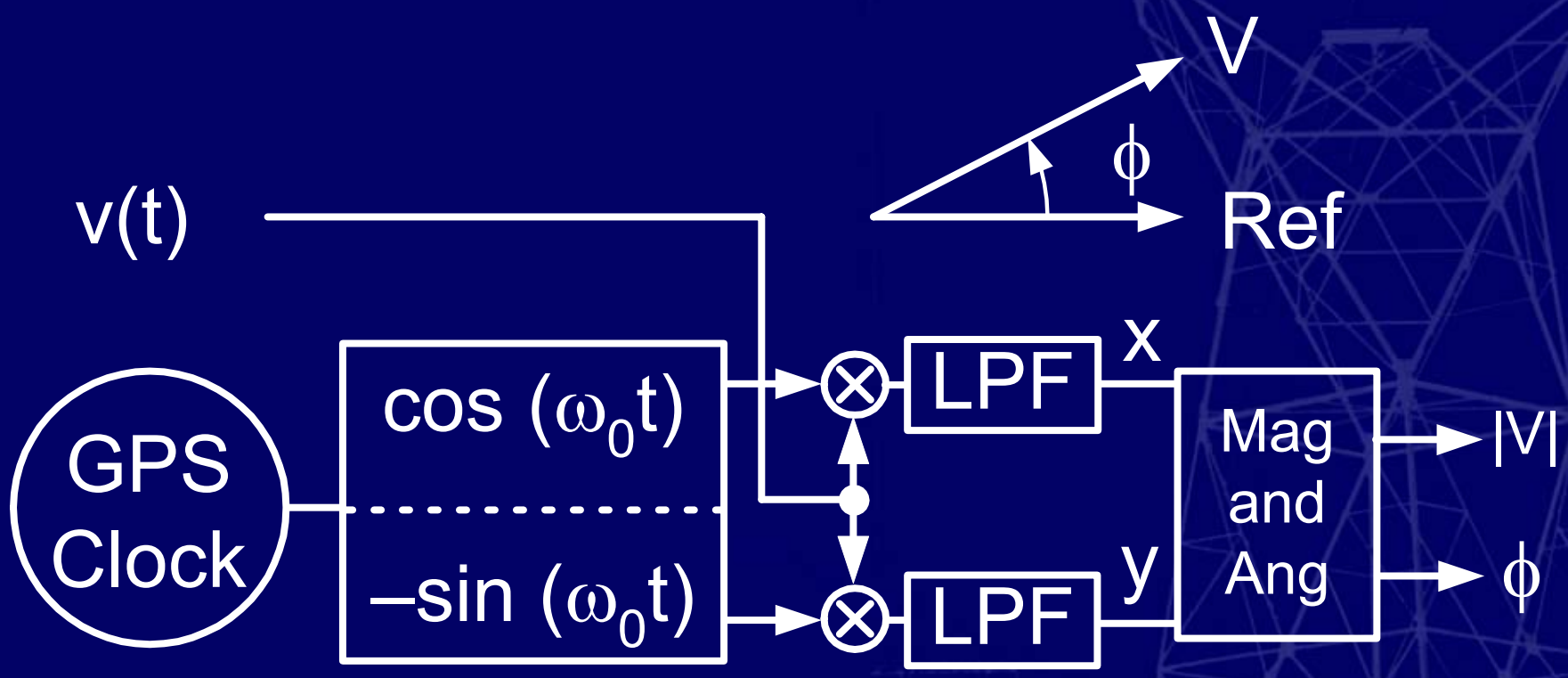

Avg. Filter with Zeros at f_{nom} and $2f_{nom}$

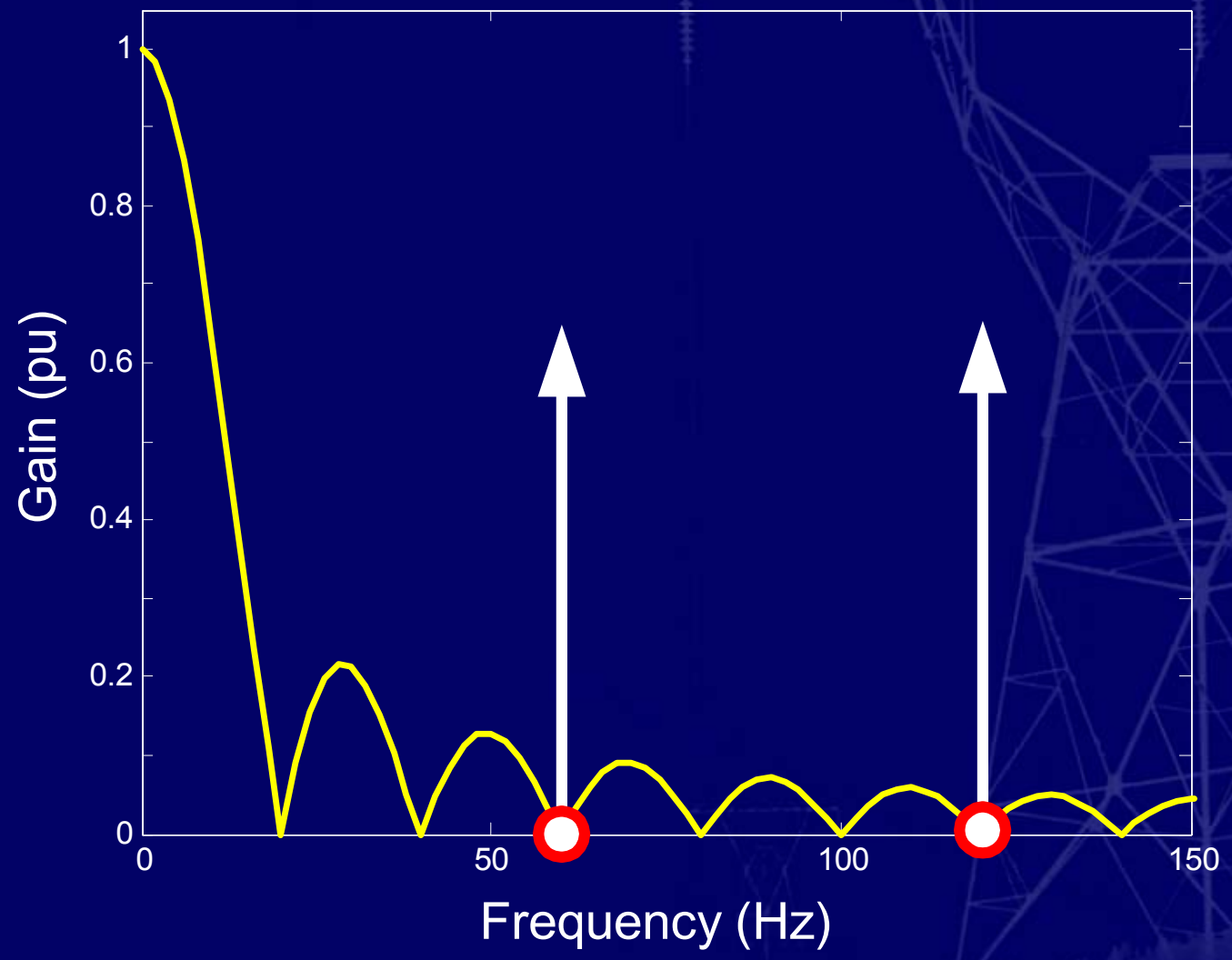

Average Filter Freq. Response

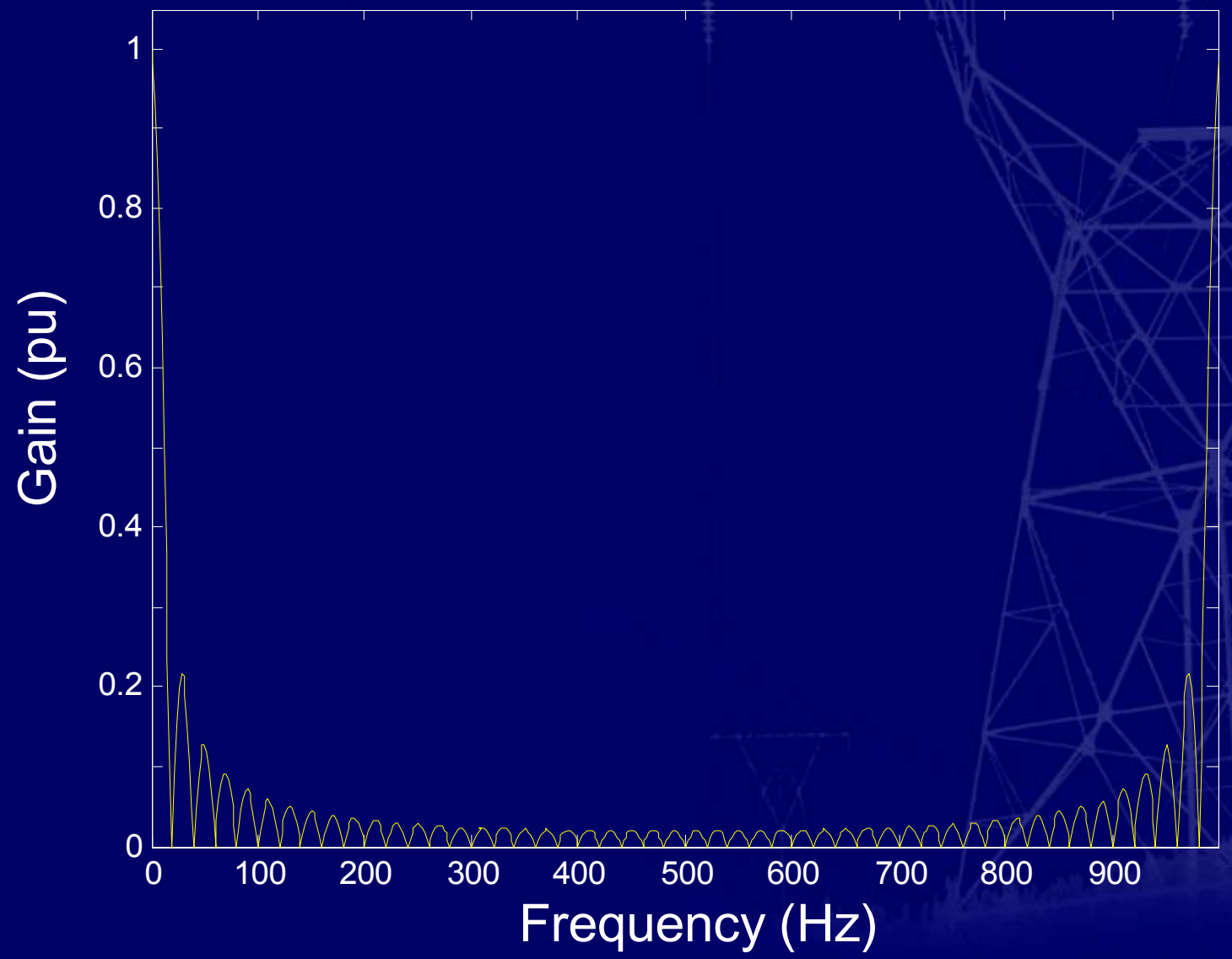

Decimation Introduces New Alias Freq.

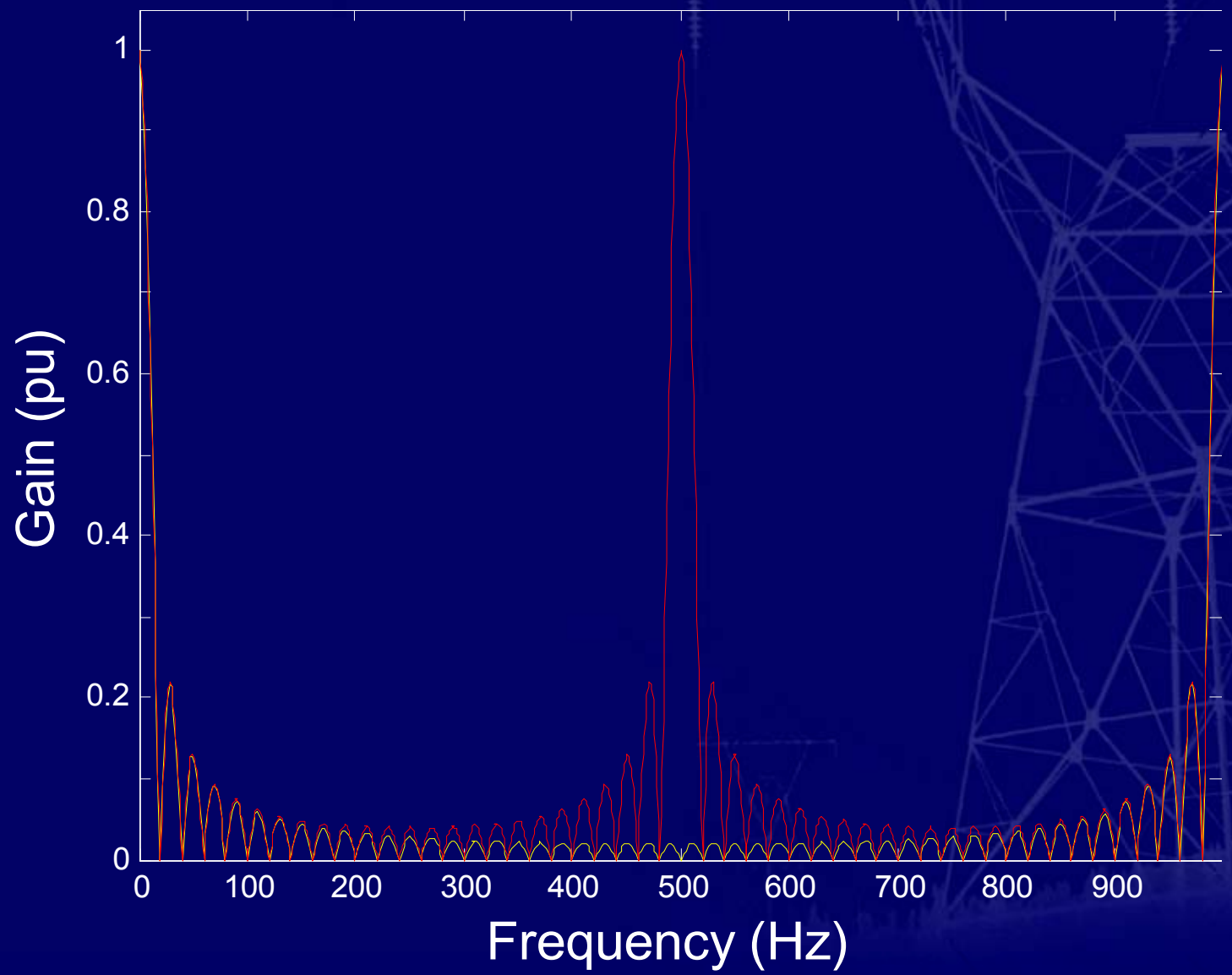

System Resonance Frequencies

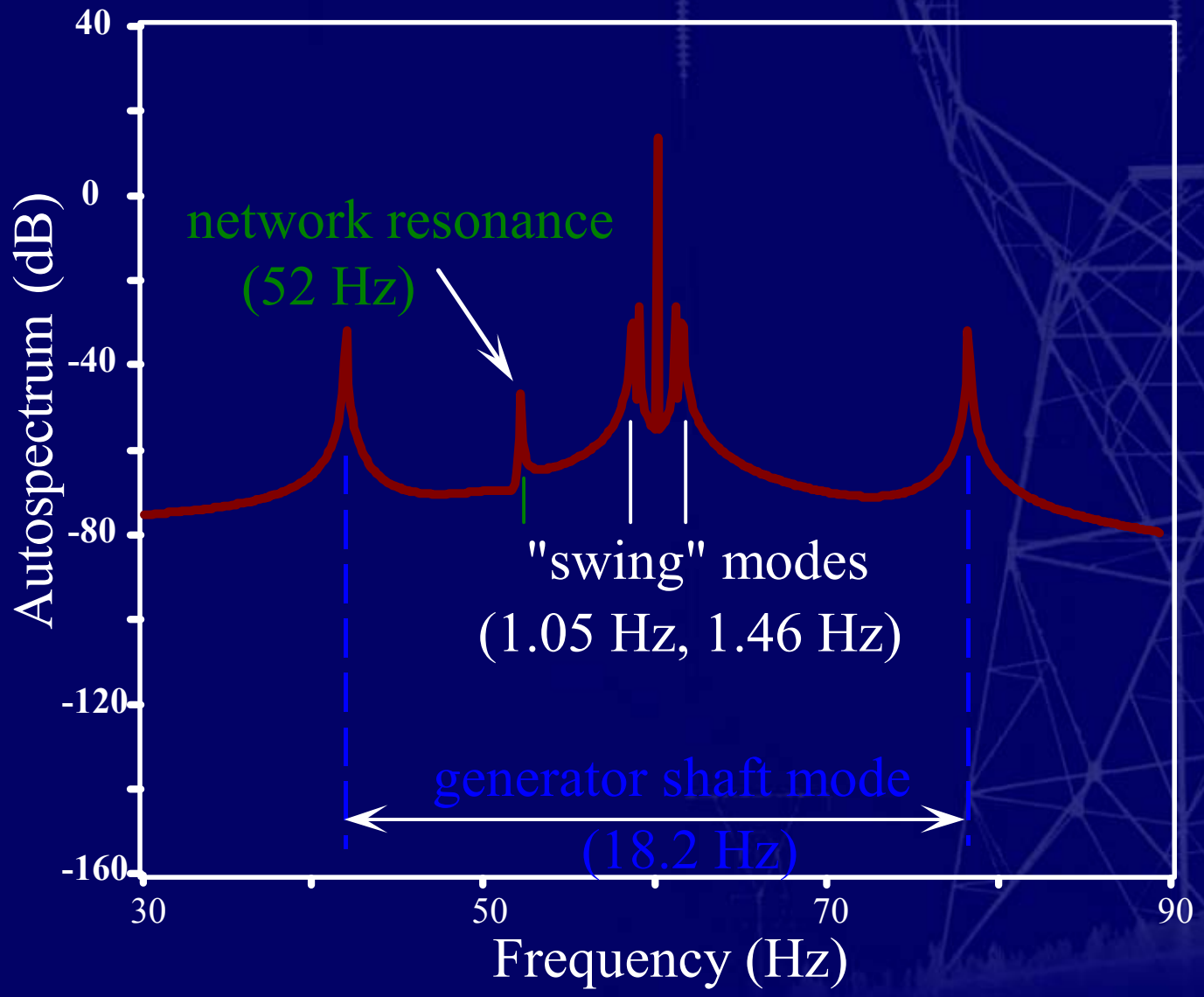

LPF BW for 60 Messages/Second

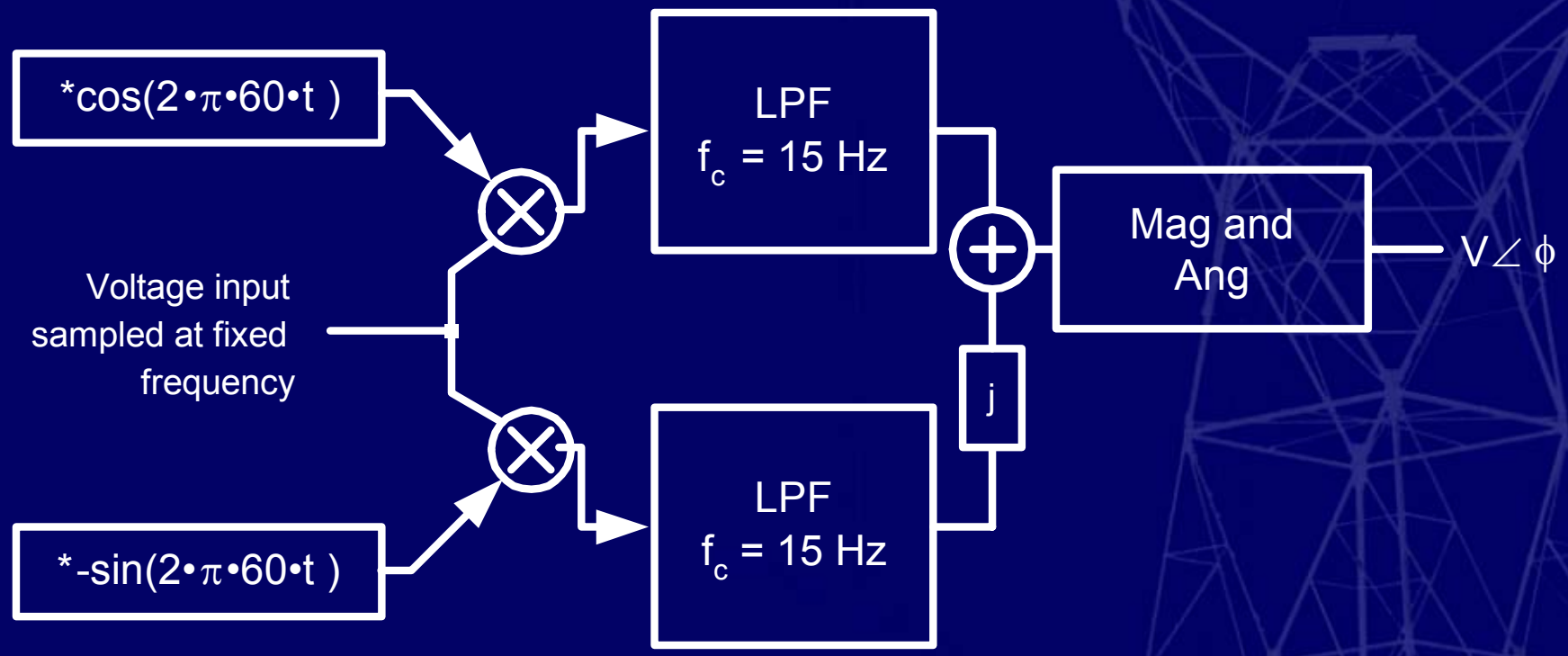

*Time-synchronized reference signals

Combined Filter Freq. Response

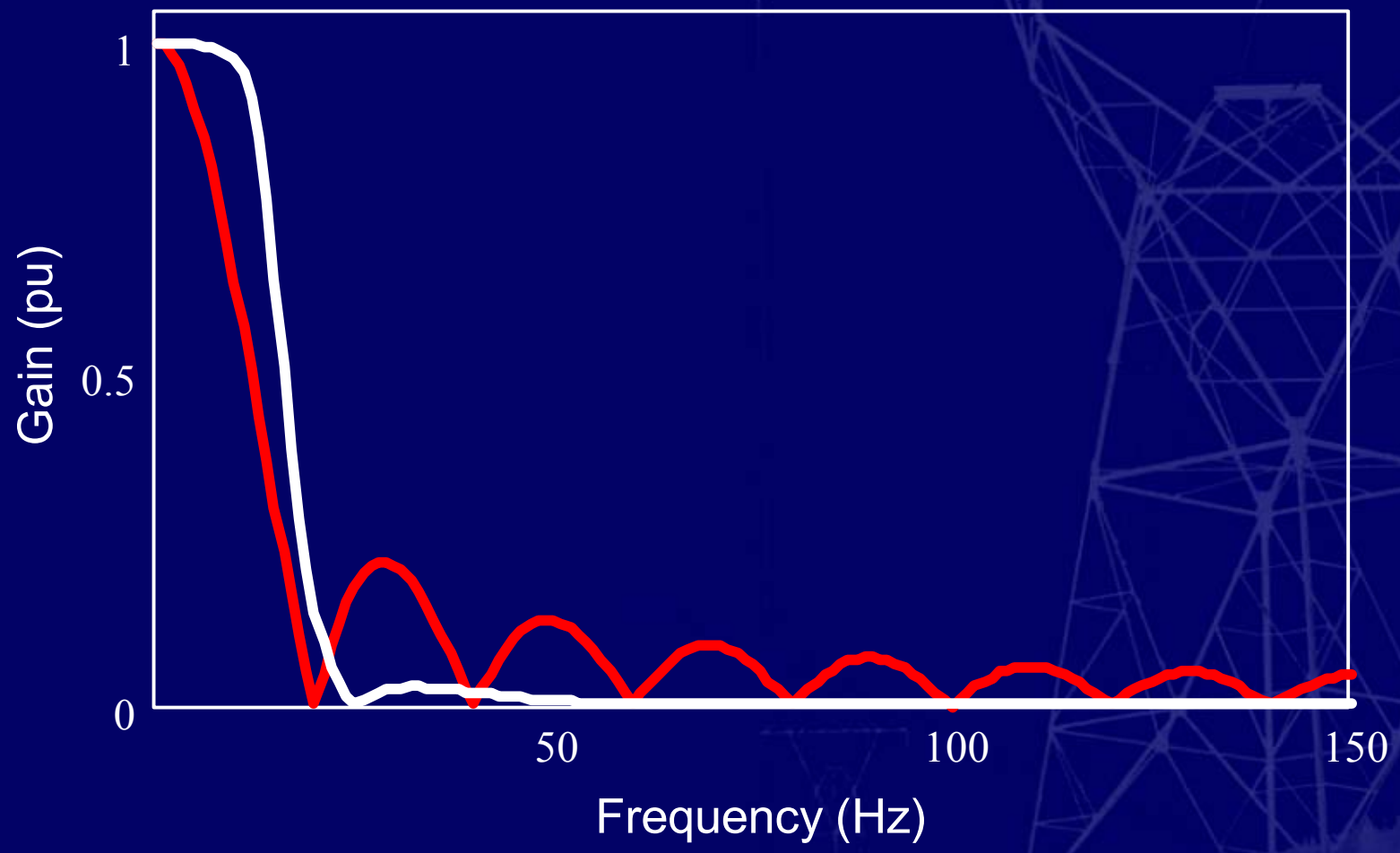

Total Filtering Freq. Response

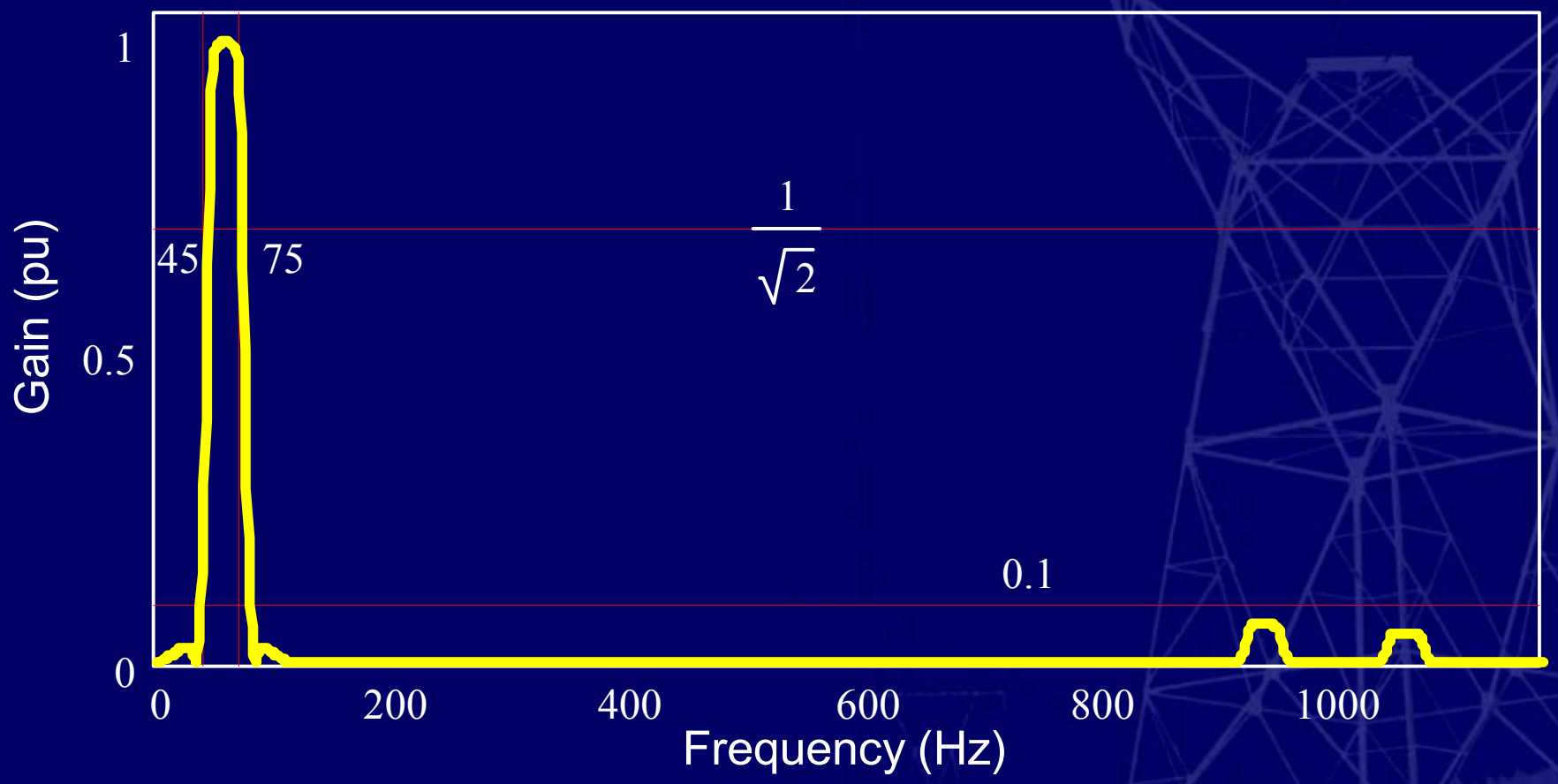

Customer Testimonial

Current News
TRANSEND
VOLUME 6 , ISSUE 2 • AUGUST 2004

Protection and Control group goes hi tech

Graham Shepherd, Protection and Control Engineer, working with the synchrophasor (the units in the background) installed at Chapel Street Substation

Satendra said. "We were very excited about using the synchrophasor technology produced by Schweitzer Engineering Laboratories Inc. (SEL) and in the process ensured that Transend became the first Australian electricity supply utility to trial the SEL technology."