EIPP

Standards & Performance Task Team

January 22, 2004

Sakis Meliopoulos
Professor
Georgia Institute of Technology

Outline

- Membership
- Standards & Performance Issues
- Device Issues
- Systematic & Instrumentation Errors
- Data Reliability
- Self-Healing Issues
- Course of Action

Membership

- Bruce Fardanesh, NYPA
- Edvina Uzunovic, NYPA
- Jerry Berndsen, ENTERGY
- Floyd Galvan, ENTERGY
- Mike Ingram, TVA
- Ullattil Manmadhan, ABB
- George Alexander, SEL
- John Hauer, PNNL
- Matt Donnelly, PNNL
- Ken Martin, BPA
- Ray Hayes, AEP
- Mark Adamiak, GE-Multilin

Objectives

Characterize Data Precision

Characterize Data Reliability

Standards & Performance Issues

Device (Hardware+Software) Issues

Short Term Issues

- Systematic Errors.
- Instrumentation Channel Error

Long Term Issues:

- Data Reliability (multiple and independent validation procedures).
- Reliable and Robust State Estimation of the system. (model accuracy, hybrid measurement data, performance assessment, resetting).
- Self-healing Capability (remote calibration procedures, “watchdog” systems, failover procedures, etc.)

Device Standards

- A/D Converter Technology
- A/D Converter Word Length
- Sampling Rate (samples per second per channel)
- Automatic Calibration
- GPS Time Tagging
- Simultaneous Sampling
- GPS synchronized sampling – navigation mode assertion
- Voltage Input Isolation
- Current Input Isolation
- Anti-Aliasing Filters
- Post Signal Processing Algorithms (phase, frequency, etc.)
- Phase Measurement Error at 60 Hz
- Communications
- “watch dog” timer

Systematic Errors

- GPS Theoretical Accuracy – 0.5 Microseconds
  (Phase Error 0.01 Degrees at 60 Hz)

- Sources of Systematic Errors
  - Instrument transformer frequency response.
  - Instrumentation Cable Delays
  - Digital Filter and other DSP Latencies.

  Above errors tend to be constant in units from same manufacturer, resulting in systematic errors.

- Single-Vendor vs. Multi-Vendor System

Instrumentation Errors

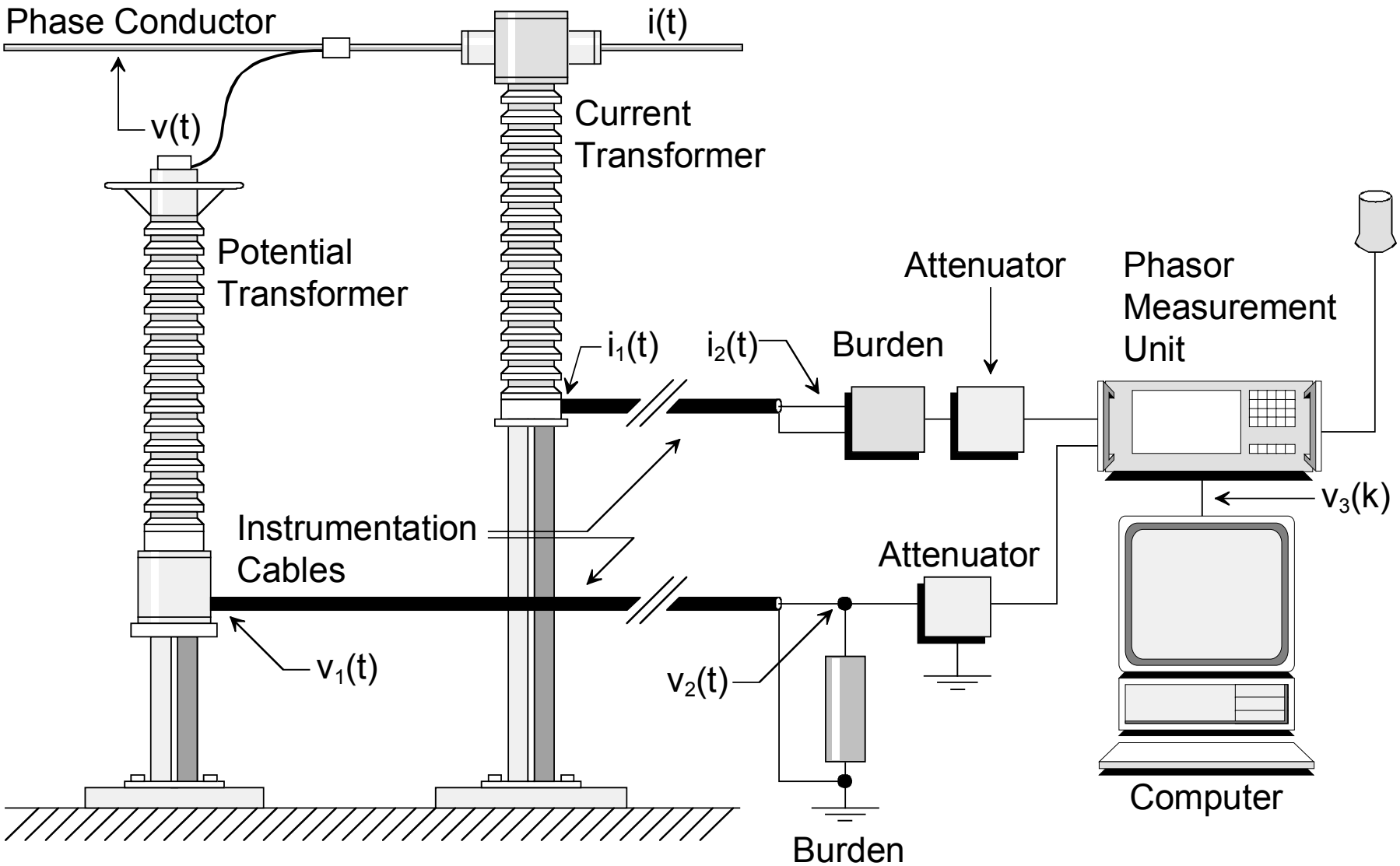

Error Characteristics of Instrumentation

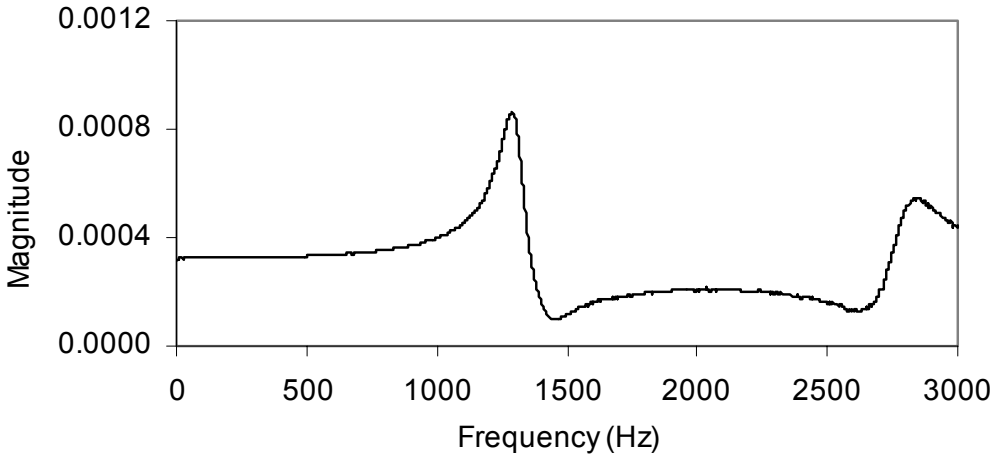

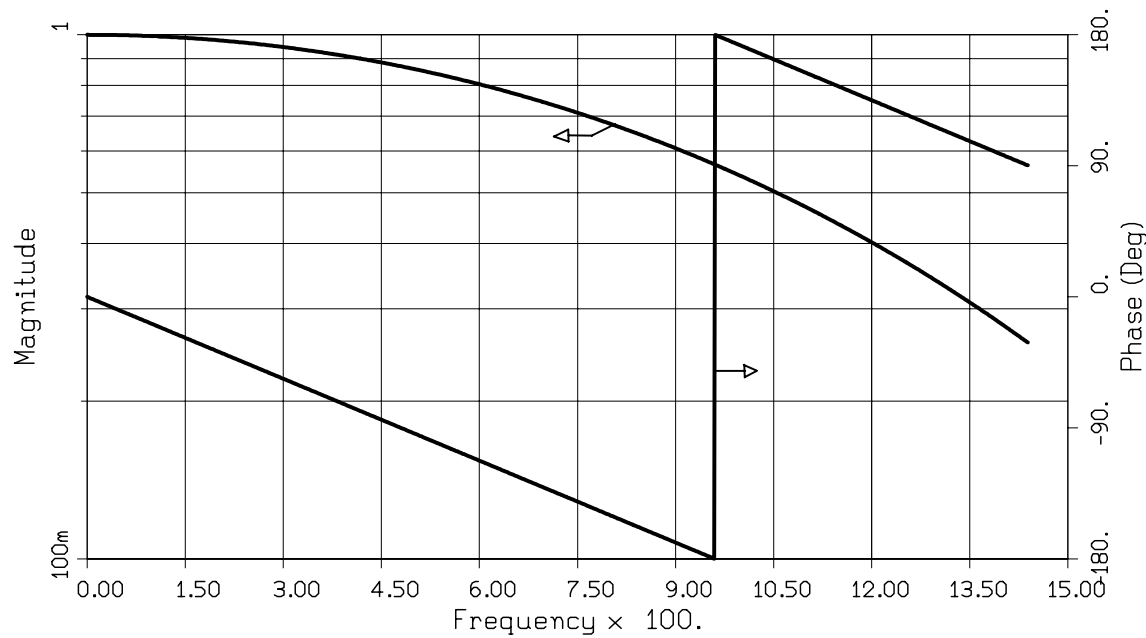

Instrumentation Errors

Voltage Measurement Error During Transients

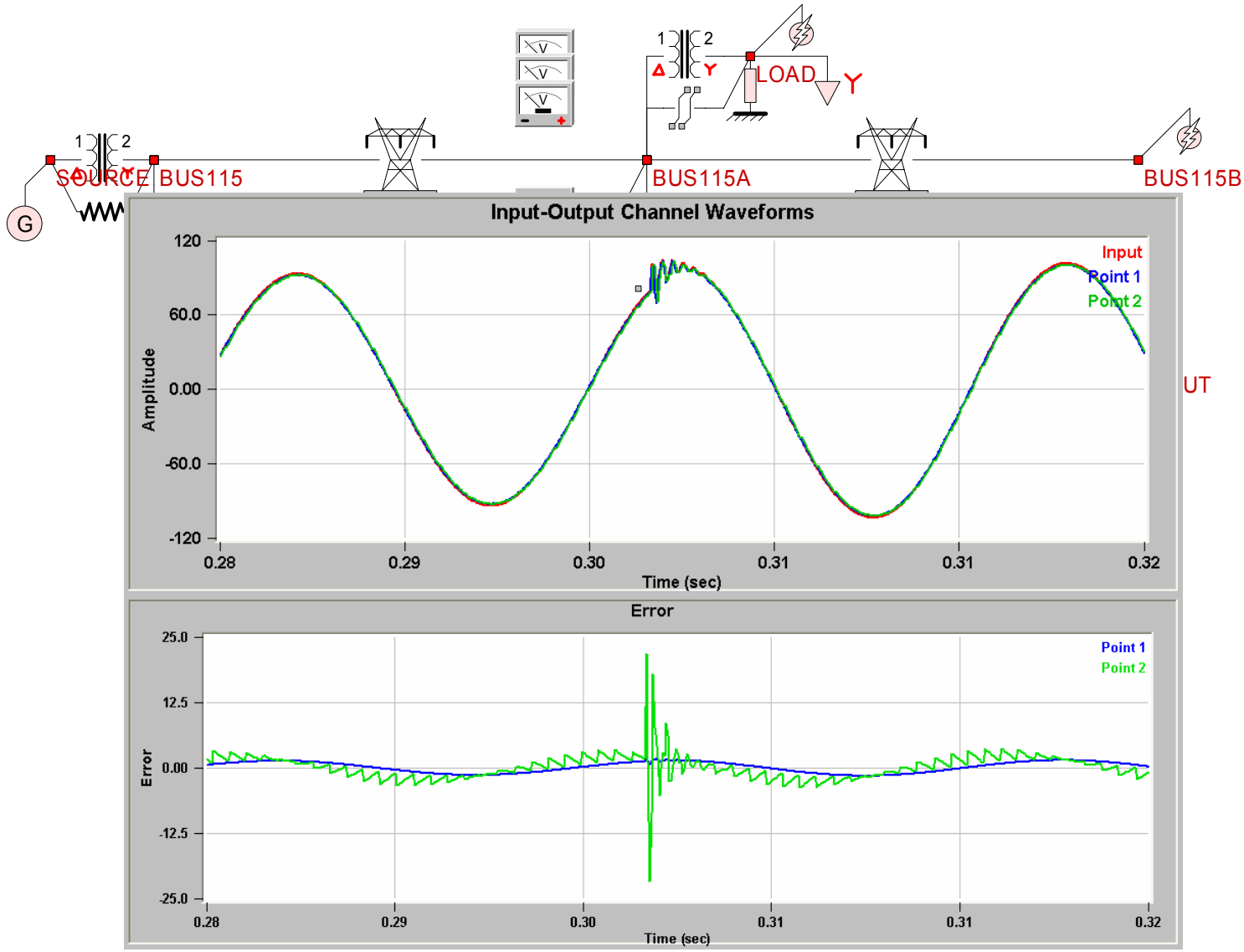

Instrumentation Errors

Voltage Measurement Error During Fault

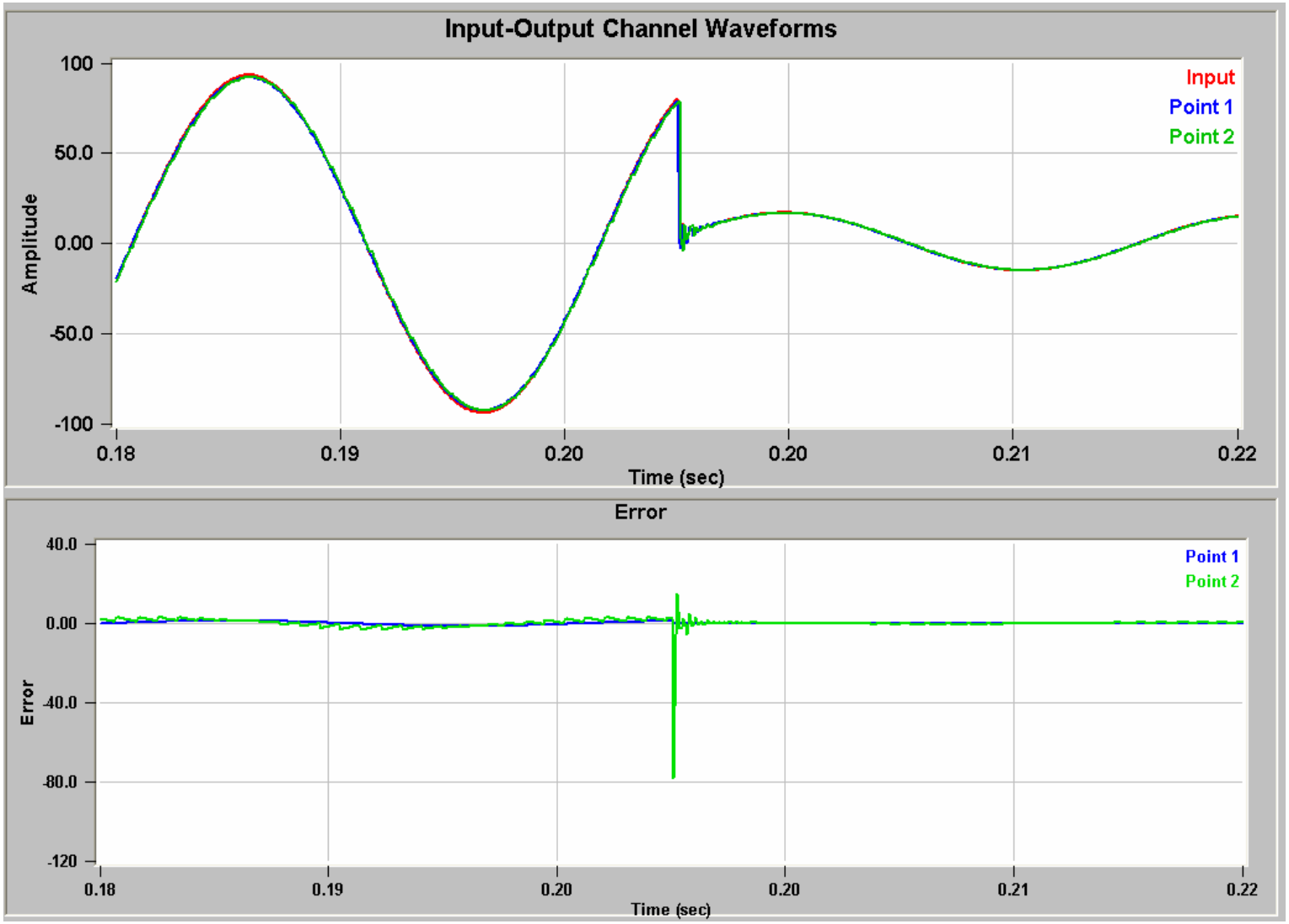

Course of Action

- Review Existing and “On-Going” Standards
- Characterization of Synchronized Measurement Devices
- Data Access of Synchronized Measurement Devices
- Characterization of Instrumentation Channels
- Remote Calibration
- EMC Issues

Produce a Report That Addresses These Issues (and others) and Provide Recommendations

Τέλος